PRODUCT GUIDE

RAIL AND MILITARY LAND SYSTEMS

ABMP connectors offer guaranteed performance in the harshest of environments. Complete with features such as a positive lock and quick disconnect to ensure fast and reliable mating.

ABMP

High Speed and Signal

Data Connector

© TT Electronics 2020. All rights reserved.

WWW.TTELECTRONICS.COM

ABMP

Contents

Global Presence ..... 03.

ABMP Family Overview ..... 04.

Military and Defence ..... 05.

ABMP Series Summary ..... 06.

SteadiShield® ..... 07.

Technical Information ..... 08.

Quadrax Test Results ..... 09.

OcTrain® ..... 10.

Part Number Explanations ..... 11.

ABMP Series ..... 12.

Multipole Contacts ..... 13.

Contacts ..... 14.

Coax Contacts ..... 15.

Grommet Part Numbers and Sealing ..... 16.

Panel Mounted Receptacle - Rear Mounting ..... 17.

Plug Connector (Style 'T' Less Accessories) ..... 18.

Accessory options ..... 19.

Protective Caps ..... 20.

Nut plates and sealing gaskets ..... 21.

+44 (0) 1443 740 331
connectors@ttelectronics.com
www.ttelectronics.com

Abercynon, Mountain Ash,
Rhondda Cynon Taff,
CF45 4SF

TT Electronics

GLOBAL PRESENCE

The world's demand for electronics is increasing as new technologies, with a higher dependence on complex components, are being adopted by a broader customer base. This growth provides TT Electronics an assured future as we focus our efforts to deliver excellence in customer service and quality products to these markets.

We are a global provider of engineered electronics for performance-critical applications.

Modular Bayonet Lock Connector

ABMP Rail

TT Electronics' has multiple facilities for the design and manufacture of interconnection systems with engineering teams providing custom solutions

ROLLING STOCK

Design, development and supply of interconnection solutions direct to major OEM partners.

EQUIPMENT

Comprehensive product portfolio for all electrical interfaces on all rail vehicles.

INFRASTRUCTURE & SIGNALLING

Design, development and supply of interconnection solutions direct to major OEM partners.

SERVICES

Design, development and supply of interconnection solutions direct to major OEM partners.

ABMP

Military and Defence

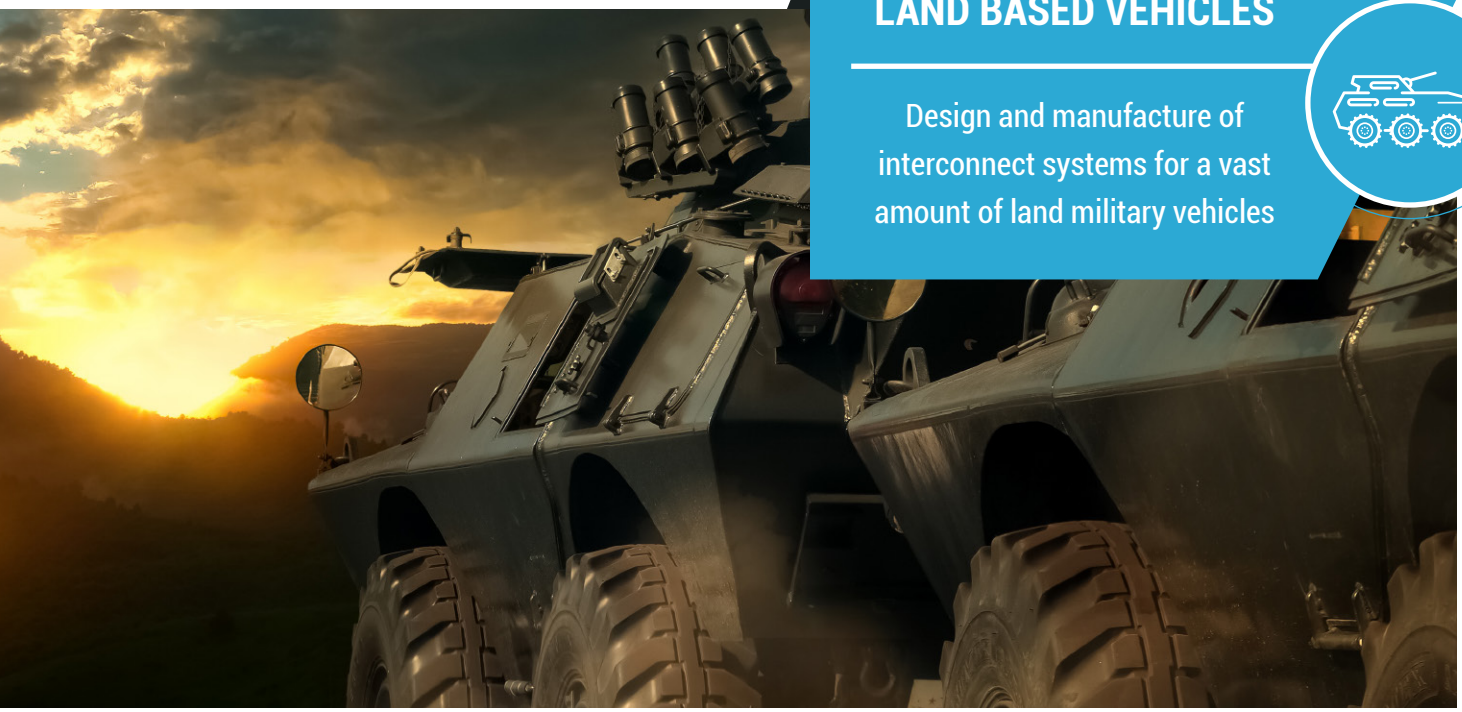

LAND BASED VEHICLES

Design and manufacture of interconnect systems for a vast amount of land military vehicles

We proudly serve through engineering and manufacturing partnerships with the world's leading aerospace, defence and security companies.

TT Electronics meet the industry's most challenging demands with technology solutions that are more reliable, smaller, lighter and optimally packaged to deliver peak performance for your mission-critical applications.

Soldier Systems

Military Land Systems

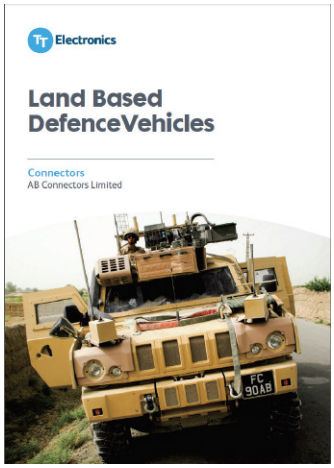

Scan QR Code to view our Land Based Vehicles Brochure

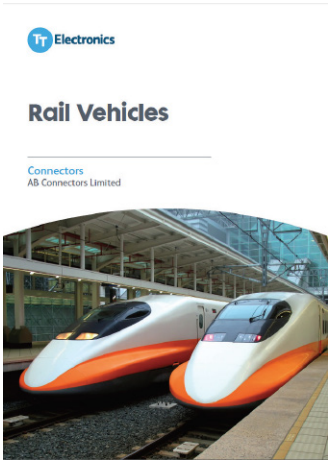

Scan QR Code to view our Rail Vehicles Brochure

DATA CONNECTORS

ABMP Series

Signal And High Speed

- Low fire hazard thermoplastic insulator
- Multi-pole connector (high speed data)
- MIL-DTL-5015 and VG95234 style reverse bayonet
- Conforms to EN45545 HL3 R22/R23
- 5 styles of multi-pole signal contacts
- Simple and robust termination to multi-core
- Water-tight seal to the cables to meet IP67 specifications
- RoHS compliant

TT electronics brand, AB Connectors has used the experience gained in military and aerospace connector design to bring innovation into its family of connectors for industrial, automotive and general rail applications. The new range of modular bayonet-lock connectors has under gone rigorous environmental and stress testing to enable reliable signal and high-speed data interconnects up to 10G Base-T in the most demanding applications.

The MIL-DTL-5015 and VG95234 style connectors are available in a range of sizes to accept various multipole contacts. Any combination of coaxial, twin-ax, tri-ax, quadrax or Octrain® modules can be specified, delivering a highly versatile connector system capable of consolidating up to seven high-speed Ethernet connections or many combinations of signal and data links.

The contacts feature industry-standard crimp terminations, enabling rapid connection to multi-core cables. Also, the insulator design eliminates the need for insertion or extraction tooling. The sealing system employs a stepped wire sealing grommet, which provides a water tight seal to the cables to meet IP67 specifications.

The modular contacts are housed in a removable thermoplastic insulator, which can be positioned in a number of orientations and features a polarising keyway to maintain correct orientation with the outer shell. The insulator is engineered to present a low fire hazard. Gold plated copper contacts display low contact resistance, better than 5mΩ nominal and 10mΩ after conditioning Maximum operative voltage is 500Vpeak (DC or AC RMS), and the connectors are rated for operation from -55°C to +125°C.

Product Profile

ABMP SteadiShield®

TT Electronics SteadiShield® connectors are for engineers who have multiple ethernet screen requirements, within one connector. SteadiShield® connectors have a metalized insert that provides instant screen termination with a common ground.

Unlike traditional braid and clamp solutions, SteadiShield® provides improved reliability and a simplified termination process which reduces the assembly-time.

SteadiShield® connectors are fully compatible with all the contact arrangements available for the standard ABMP range. With the capability in-house of machining the inserts, TT Electronics can adapt the product range for custom specific applications.

Please contact TT Electronics with any desired contact arrangements not specified within this catalogue.

Technical Information

ABMP Series

Materials & Finishes

Shell:	Aluminium alloy, cadmium free plating and a choice of passivation colour.
Insulators:	Low fire hazard thermo plastic - conforms to EN45545 HL3 R22/R23*
Contacts	Co-ax - silver or gold plated Twin-ax, tri-ax, quadrax, Octrain® - copper alloy, gold plated

Mechanical Features

Coupling:	Three pin bayonet lock
Polarisation:	Shell key/keyway in removable insulator
Contact type:	Crimp, multi-pole signal, sandwich retention
Contact arrangements:	1 to 16 way
Endurance:	Minimum 500 mating/unmating operations in any connector
Shock & vibration:	BSEN61373 Cat 1. Class A.
Contact retention:	Minimum 200N

Electrical Data

Voltage proof:	500v DC(AC RMS)
Contact resistance:	<5m ohms, less than 10 ohms after conditioning
Dielectric withstanding voltage:	Sea level = 500 Vrms between signal contacts and signal contact/body
Insulation resistance:	At ambient temperature >5000m ohms, at high temperature >1000m ohms
Note:	Suitable for data transmission @ 100 Base-Tx on Cat 5e: Single Quadrax Suitable for data transmission @ 1000 Base-T on Cat 5e: 2 x Quadrax Suitable for data transmission @ 10G Base-T on Cat 7A S/FTP

Environmental Features

Temperature rating:	-55°C to +125°C
Sealing:	IP67

*Refer to page 12 for standard insert arrangements

Sealing: The company reserves the right and may change or vary specification without prior written notice.

Quadrax Test Results

ABMP Series

Quadrax Test Results for 100 Base-Tx @85m

Results	Measured Values	Pairs
Length (ft), Limit 328	286	3, 6
Prop. Delay (ns)	440	1, 2
Delay Skew (ns)	18	1, 2
Resistance (ohms)	14.1	1, 2
Impedance (ohms)	100	3, 6
Insertion Loss Margin (dB)	1.1	1, 2
Frequency (MHz)	100	1, 2
Limit (dB)	24	1, 2

Worst Case Margin Worst Case Value

Pass	Main	SR	Main	SR
Worst Pair	12-36	12-36	12-36	12-36
Next (dB)	3.5	3.1	6.2	4.9
Freq. (MHz)	11.6	29.1	90.8	82.5
Limit (dB)	42.8	36.1	27.8	28.5

Pass	Main	SR	Main	SR
Worst Pair	36	12	36	36
Next (dB)	11.5	10.5	11.5	12.9
Freq. (MHz)	91.0	2.8	91.0	100.0
Limit (dB)	8.4	15.0	8.4	8.0

Wire Map (Ethernet Two-Pair) **PASS**

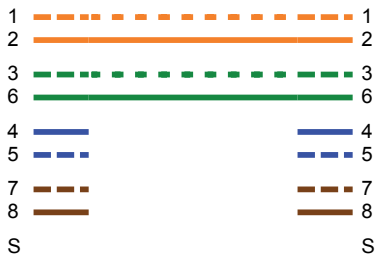

Quadrax Test Results for 100 Base-Tx @85m

Results	Measured Values	Pairs
Length (ft), Limit 328	286	3, 6
Prop. Delay (ns)	440	1, 2
Delay Skew (ns)	18	1, 2
Resistance (ohms)	14.1	1, 2
Impedance (ohms)	100	3, 6
Insertion Loss Margin (dB)	0.5	1, 2
Frequency (MHz)	100	1, 2
Limit (dB)	24	1, 2

Worst Case Margin Worst Case Value

Pass	Main	SR	Main	SR
Worst Pair	12-36	45-78	45-78	45-78
Next (dB)	4.7	4.0	5.1	4.1
Freq. (MHz)	6.9	83.0	97.3	97.3
Limit (dB)	46.6	28.5	27.3	27.3

Pass	Main	SR	Main	SR
Worst Pair	45	36	36	36
RL (dB)	11.8	10.2	12.3	10.2
Freq. (MHz)	3.8	89.0	86.3	89.0
Limit (dB)	15.0	8.5	8.7	8.5

Pass	Main	SR	Main	SR
Worst Pair	45-78	45-78	36-45	45-36
ACR-F (dB)	8.2	8.2	21.8	12.2
Freq. (MHz)	10.5	10.5	91.8	91.8
Limit (dB)	36.6	36.6	15.1	17.7
Worst Pair	78	78	45	45
PS ACR-F (dB)	9.8	10.1	14.2	13.9
Freq. (MHz)	10.1	9.4	91.8	88.3
Limit (dB)	34.3	35.0	15.1	15.5

Wire Map (T568B) **PASS**

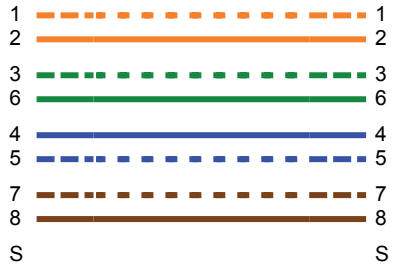

Scan QR code to view full product portfolio

OcTrain®

10Gb Ethernet contact suitable for CAT 7 Cable

Cable ID: AB1 Test Summary: PASS

Date / Time: 11/09/2018 10:11:23 AM
Headroom: 2.7 dB (NEXT 12-45)
Test Limit: 10GBASE-T
Cable Type: Cat 7 S/FTP
NVP: 78.0%

Software Version: V5.5 Build 2
Limits Version: V6.3
Main (Module): 01/06/2018
Remote (Module): 01/06/2018

Model: DSX-5000
Model: DSX-5000
Remote S/N: 2972300
Main Adapter: DSX-CHA004
Remote Adapter: DSX-CHA004

Length (m), Limit 100.0	(Pair 78)	59.2
Prop. Delay (ns), Limit 555	(Pair 45)	258
Delay Skew (ns), Limit 50	(Pair 45)	5
Resistance (ohms), Limit 25.0	(Pair 12)	10.57
Insertion Loss Margin (dB)	(Pair 78)	23.3
Frequency (MHz)	(Pair 78)	499.0
Limit (dB)	(Pair 78)	53.3

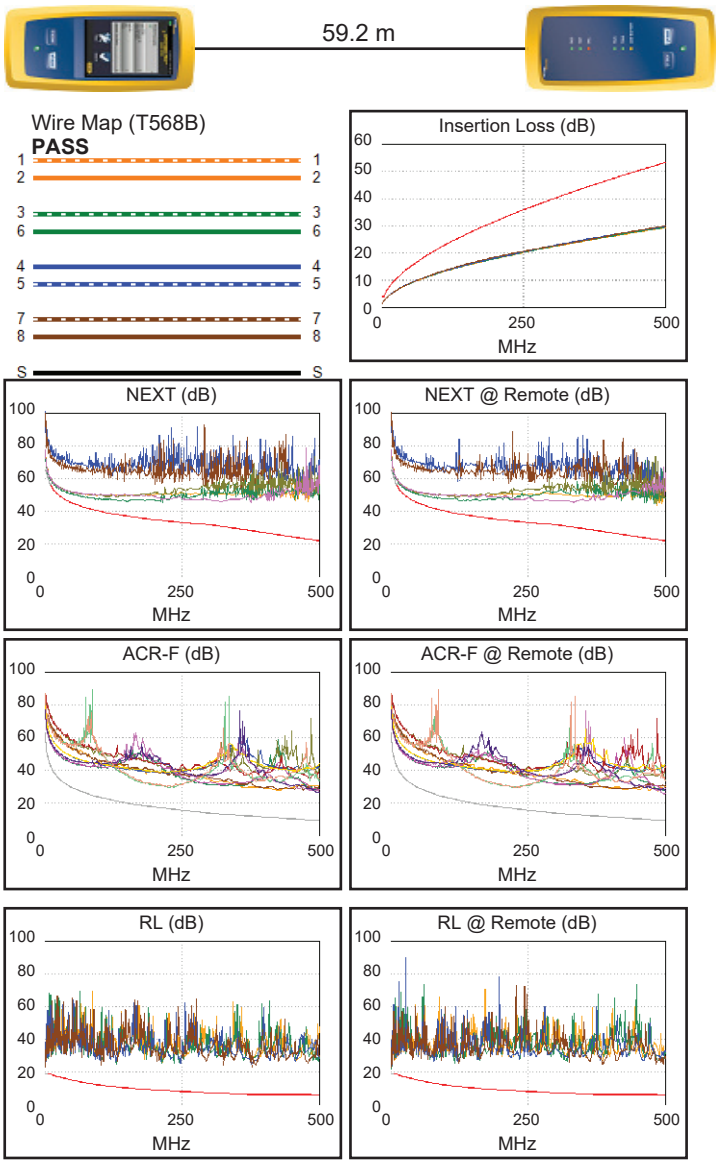

Worst Case Margin Worst Case Value

Pass	Main	SR	Main	SR
Worst Pair	12-45	12-45	45-78	12-36
Next (dB)	2.7	2.9	17.3	22.7
Freq. (MHz)	10.3	13.8	375.0	484.0
Limit (dB)	56.4	54.3	28.2	22.7
Worst Pair	12	12	45	36
PS NEXT (dB)	2.7	2.8	17.7	22.5
Freq. (MHz)	10.8	10.5	367.0	493.0
Limit (dB)	53.5	53.6	26.1	20.7

Pass	Main	SR	Main	SR
Worst Pair	45-78	78-45	78-36	36-78
ACR-F (dB)	12.9	13.2	16.8	16.2
Freq. (MHz)	226.0	226.0	498.0	497.0
Limit (dB)	16.2	16.2	9.3	9.3
Worst Pair	12	12	36	36
PS ACR-F (dB)	14.8	14.8	18.2	18.0
Freq. (MHz)	4.6	4.6	498.0	485.0
Limit (dB)	47.0	47.0	6.3	6.5

Pass	Main	SR	Main	SR
Worst Pair	12	12	78	78
RL (dB)	11.7	10.6	18.1	18.6
Freq. (MHz)	12.1	10.4	385.0	495.0
Limit (dB)	18.6	18.9	6.1	6.0

Compliant Network Standards:

10BASE-T	100BASE-TX	100BASE-T4
1000BASE-T	10GBASE-T	ATM-25
ATM-51	ATM-155	100VG-AnyLan
TR-4	TR-16 Active	TR-16 Passive

Part Number Explanations

ABMP Series

ABMP	03	T	28M4	G	P	M**	VO	*

Basic Series:

Shell style:

- 00 : 4 hole square flange, front mount
- 03 : 4 hole square flange, rear mount
- SE06: Plug with RFI grounding
- 17: SteadiShield® receptacle
- 18: SteadiShield® plug

Accessory Type:

- T : no accessory

Insert arrangement:

- 1-16 Way, see page 12

Grommet:

- BLANK : no grommet.
- G : grommet.

Contact Type:

- P = pin (male)
- S = socket (female)

Modification Code:

- BLANK : standard black zinc cable plating
- M6 - metric tapped holes
- M** : consult factory for details

VO

- VO : without contacts (Contacts must be chosen separately)

Insulator Oriention:

- N : normal
- W, X, Y, Z : alternative orientations

Insert Arrangements

ABMP Series

Views from front face of pin insert

Shell Size 18
18-M3

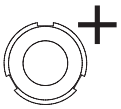

1 Multipole contact

Shell Size 20
20-M8

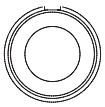

1 Coax contact
ABMPC #003
or ABMP #004

Shell Size 22
22-M5

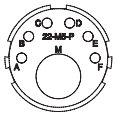

1 Multipole contact
6 #16 contacts

Shell Size 22
22-M6

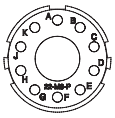

1 Multipole contact
10 #16 contacts

Shell Size 28
28-M4

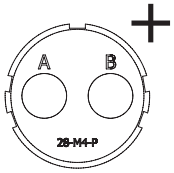

2 Multipole contact

Shell Size 28
28-M13

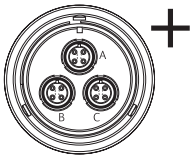

3 Multipole contact

Shell Size 28
28-M14

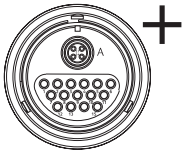

1 Multipole contact
15 X **ABCIRP** #16 contacts

Shell Size 32
32-M10

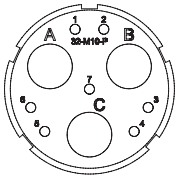

3 Multipole contact
7 #16 contacts

Shell Size 36
36-M2

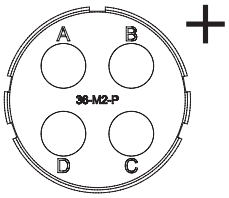

4 Multipole contact

Shell Size 36
36-M7

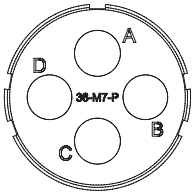

2 Multipole contacts
2 Coax contacts
ABMPC #002

Shell Size 40
40-M1

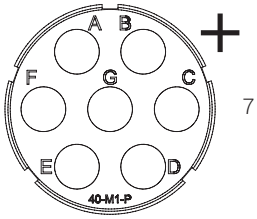

7 Multipole contact

Shell Size 40
40-M9

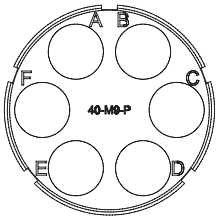

6 Coax contacts
or ABMPC #004

All multiple cavities can also accept Coax contacts ABMPC#001

Replace # with P = Pin or S = Socket

Notes:

See contact-platform compatibility chart on page 14 for coaxial

Custom insert arrangements available on request

Multipole inserts are not SNCF approved.

Preferred arrangements identified by + conform to

EN45545 HL3 R22/R23

28-M14 uses 15 x ABCIRP contacts #16 - see

ABCIRP Catalogue.

Consult factory for others

Multipole Contacts

ABMP Series

ABMP # ## #A ##

- ABMP: AB multiple, OC-OcTrain
- #: Q - Quadrax, TR - Triax, T - Twinax
- ##: Internal contact size - see table 1
- #A: P - Pin contact, S - Socket contact
- ##: Crimp anvil adaptor for reduced cable OD's see table 2

Table 1: Internal Contact Size Availability

		CONTACT SIZE (AWG)				
		16	18	20	22	24
ABMPQ	QUADRAX	✓	✓	✓	✓	✓
ABMPTR	TRIAX	✓	✓	✓	✓	✓
ABMPT	TWINAX	✓	✓	✓	✓	✓
ABMPOC	OCTRAIN	x	x	x	✓	✓

Table 2: Crimp Modification Codes

OUTSIDE CABLE DIAMETER	CODE
7.00 - 8.30	None
6.00 - 7.00	C1
5.00 - 6.00	C2
4.00 - 5.00	C3

Multipole pin contact

OcTrain Twinax Triax Quadrax

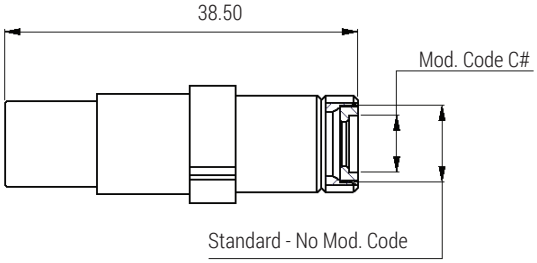

Multipole pin contact

OcTrain Twinax Triax Quadrax

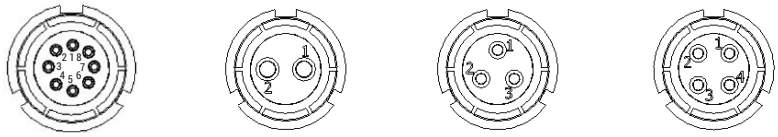

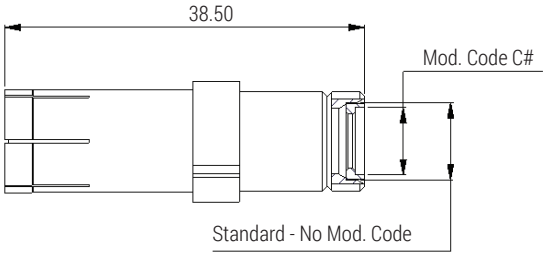

Hand Crimp Tool

- AB Part No: ABBFT8
- Contact Sizes 16 and 24

Hand Crimp Tool

- AB Part No: ABBAFM8

Pneumatic Crimp Tool

- AB Part No: ABWA27F
- Contact Sizes 12 and 16

Turret Locator

- AB Part No: ABBUH2-5
- Use M22520-02(09/07) turret for OcTrain contacts

Hand Crimp Tool

- AB Part No: ABBD51
- External Multipole Contacts

Electric Crimp Tool

- AB Part No: ABBPL0550A1130

Die Sets

- AB Part No: ABT0004
- External Multipole Contacts (ABMP####)

See ABSPEC595 & ABSPEC652 for assembly and crimping information

Contacts

ABMP Series

Coax Contacts

ABMP C # ####

- ABMP: AB multiple
- C: C - Coax
- #: P - Pin contact; S - Socket contact
- ####: Variation code See table

Coax Socket and Pin

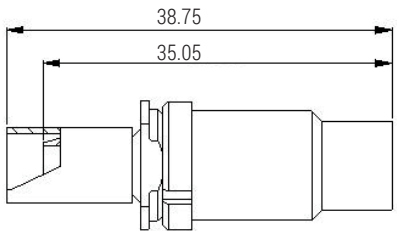

ABMP C S 001

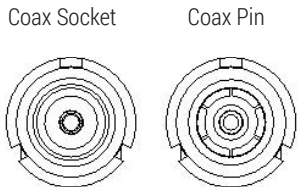

(for illustration purposes)

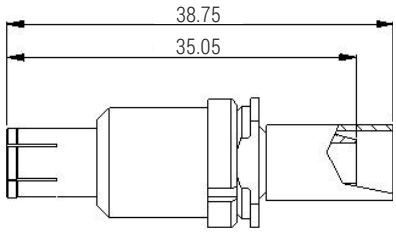

ABMP C P 001

Contact - Planform Compatability Chart

Code	001	002	004
Impendence (omhs)	**50**	**50**	**75**
Cable type	**LMR 240**	**GX_07272_D & GX_07272_D-04**	**G_04273-12**
18-M3	✓	x	x
20-M8	x	x	0
22-M5	✓	x	x
22-M6	✓	x	x
28-M13	✓	x	x
28-M14	✓	x	x
28-M4	✓	x	x
32-M10	✓	x	x
36-M2	✓	x	x
36-M7	✓+	✓*	x
40-M1	✓	x	x
40-M9	x	x	✓

Tooling - for above contacts

Inner Contact	ABBFT8 | ABBUH2-5	Solder	Solder
BAND STRAP	-	ABB600057	ABB600057
BAND TOOL	-	ABB600061	ABB600061
CRIMP TOOL	D51 OR ABBPL0550A1130	-	-
DIE SET	ABT00004	-	-

#12 & #16 Contacts

ABMP Series

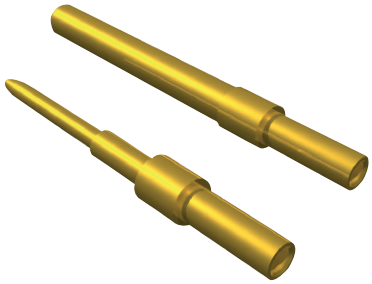

Size 16 Pin (Male)

Part Number	ØA	ØB	Conductor CSA mm2	L	Pin
ABMP 16 22 KPK P3	2.30	0.90	0.25 / 0.34	31.65	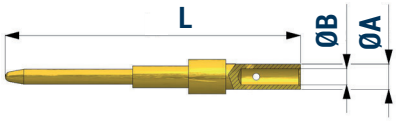
ABMP 16 20 KPK P3	2.65	1.07	0.50/0.60	31.65	
ABMP 16 18 KPK P3	2.30	1.25	0.75/0.93	31.65	
ABMP 16 KPK P3	2.75	1.75	0.93/1.50	31.65	
ABMP 16 14 KPK P3	2.90	1.80	1.68	31.65	

Size 16 Socket (Female)

Part Number	ØA	ØB	Conductor CSA mm2	L	Pin
ABMP 16 22 KLK P3	2.30	0.90	0.25 / 0.34	35.00	
ABMP 16 20 KLK P3	2.65	1.07	0.50/0.60	35.00	
ABMP 16 18 KLK P3	2.30	1.25	0.75/0.93	35.00	
ABMP 16 KLK P3	2.75	1.75	0.93/1.50	35.00	
ABMP 16 14 KLK P3	2.90	1.80	1.68	35.00	

Size 12 Pin

Part Number	ØA	ØB	Conductor CSA mm2	L	Pin
ABMP 12 20 KPK P3	2.65	1.10	0.50/0.60	31.65	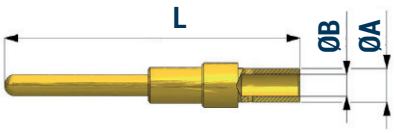
ABMP 12 18 KPK P3	2.30	1.25	0.75/0.93	31.65	
ABMP 12 16 KPK P3	2.75	1.75	0.93/1.50	31.65	
ABMP 12 14 KPK P3	2.90	1.80	1.68	31.65	
ABMP 12 KPK P3	3.80	2.50	2.50/3.00	31.65	
ABMP 12 10 KPK P3	4.40	3.00	5.53	31.65	
ABMP 12 (40) KPK P3	4.00	2.70	4	31.65	

Size 12 socket

Part Number	ØA	ØB	Conductor CSA mm2	L	Pin
ABMP 12 20 KLK P3	2.65	1.10	0.50/0.60	35.00	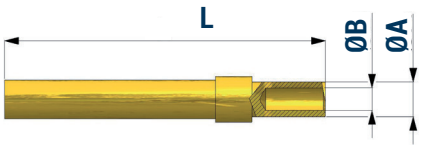
ABMP 12 18 KLK P3	2.30	1.25	0.75/0.93	35.00	
ABMP 12 16 KLK P3	2.75	1.75	0.93/1.50	35.00	
ABMP 12 14 KLK P3	2.90	1.80	1.68	35.00	
ABMP 12 12 KLK P3	3.80	2.50	2.50/3.00	35.00	
ABMP 12 10 KLK P3	4.40	3.00	5.53	35.00	
ABMP 12 (40) KLK P3	4.00	2.70	4	35.00	

For insert arrangement 28-M12, please revert to the ABCIRP catalogue for contact information.

Grommet Part Numbers and Sealing

ABMP Series

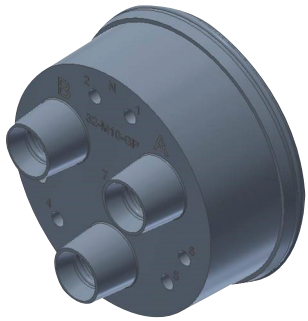

Contact - Planform Compatability Chart

Part Number	Contact Arrangement	Wire Insulation O/D Min. (mm)	Wire Insulation O/D Max. (mm)
ABCIRP 18 M3 G#	1 Multipole contact	6.00	8.50
ABCIRP 20 M8 G#	1 Coax contact	6.00	8.50
ABCIRP 22 M5 G#	1 Multipole contact 6 #16 contacts	6.00 0.80	8.50 2.30
ABCIRP 22 M6 G#	1 Multipole contact 10 #16 contacts	6.00 0.80	8.50 2.30
ABCIRP 28 M4 G#	2 Multipole contact	6.00	8.50
ABCIRP 28 M13 G#	3 Multipole contact	6.00	8.50
ABCIRP 28 M14 G#	1 Multipole contact 15# 16 contact	6.00 0.80	8.50 2.30
ABCIRP 32 M10 G#	3 Multipole contact 7 #16 contacts	6.00 0.80	8.50 2.30
ABCIRP 36 M2 G#	4 Multipole contact	6.00	8.50
ABCIRP 36 M7 G#	2 Multipole contact 2 Coax contact	6.00 0.80	8.50 2.30
ABCIRP 40 M1 G#	7 Multipole contact	6.00	8.50
ABCIRP 40 M9 G#	6 Coax contact	6.00	8.50

Grommet Filler

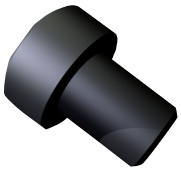

Large Grommet
Filler Plug (Multipole)

Grommet
Filler Plug

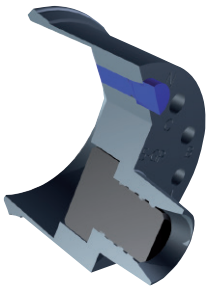

Sealed
Using Filler Plugs

Contact Size	Part Number	Colour
16	ABB16KFP	Blue
12	ABB12KFPF80	Orange
Multipole	ABMP6GFP	Black

To be used if grommet is pierced incorrectly

Panel Mounted Receptacle - Rear Mounting

ABMP Series

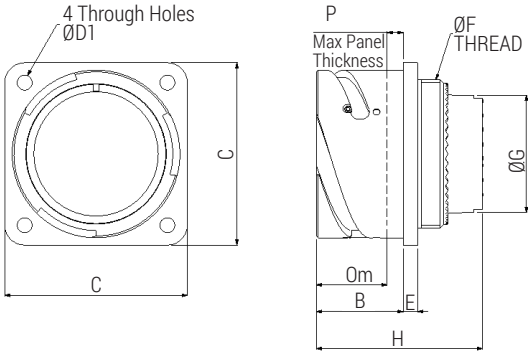

ABMP03T / ABMP17T

Shell Size	ØF Thread Class 2A	B Max	C Max	ØD1 +0, 2-0	Threaded Holes (MOD CODE M6)	E Max	ØG	H	P see note	Om Min Overlap Mated
18	1″ x 20 UNEF	23.45	35.30	3.20	M4	4.20	18.30	46.25	3.30	15.85
20	1 1/8″ x 18 UNEF	23.45	38.30	3.20	M4	4.20	20.50	46.25	3.30	15.85
22	1 1/4″ x 18 UNEF	23.45	41.30	3.20	M4	4.20	24.60	46.25	3.30	15.75
24	1 3/8″ x 18 UNEF	23.45	44.80	3.70	M4	4.20	27.00	46.25	3.30	15.75
28	1 5/8″ x 18 UNEF	24.45	51.10	3.70	M5	4.20	32.50	46.25	3.30	15.75
32	1 7/8″ x 16 UN	24.45	57.30	4.30	M5	4.20	35.80	46.25	3.30	15.75
36	1 1/16″ x 16 UNS	24.45	63.80	4.30	M5	4.20	42.50	46.25	3.30	15.75
40	1 5/16″ x 16 UN	24.45	70.20	4.30	M5	4.20	48.50	46.25	3.30	15.75

Panel Mounted Receptacle - Front Mounting

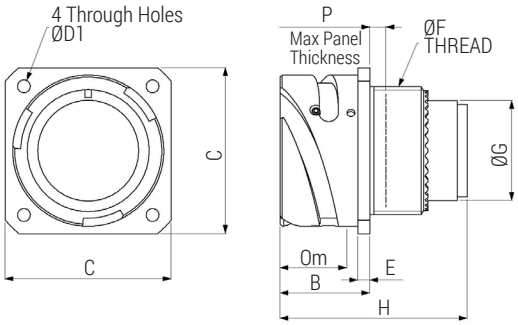

ABMP00T

Shell Size	ØF Thread Class 2A	B Max	C Max	ØD1 +0, 2-0	Threaded Holes (MOD CODE M6)	E Max	ØG	H	P see note	Om Min Overlap Mated
18	1″ x 20 UNEF	23.60	35.30	3.20	M4	4.20	18.30	46.25	3.30	15.85
20	1 1/8″ x 18 UNEF	23.60	38.30	3.20	M4	4.20	20.50	46.25	3.30	15.85
22	1 1/4″ x 18 UNEF	23.60	41.30	3.20	M4	4.20	24.60	46.25	3.30	15.75
24	1 3/8″ x 18 UNEF	25.20	44.80	3.70	M4	4.20	27.00	46.25	3.30	15.75
28	1 5/8″ x 18 UNEF	25.20	51.10	3.70	M5	4.20	32.50	46.25	3.30	15.75
32	1 7/8″ x 16 UN	25.20	57.30	4.30	M5	4.20	35.80	46.25	3.30	15.75
36	2 1/16″ x 16 UNS	25.20	63.80	4.30	M5	4.20	42.50	46.25	3.30	15.75
40	2 5/16″ x 16 UN	25.20	70.20	4.30	M5	4.20	48.50	46.25	3.30	15.75

Plug Connector (Style 'T' Less Accessories)

ABMP Series

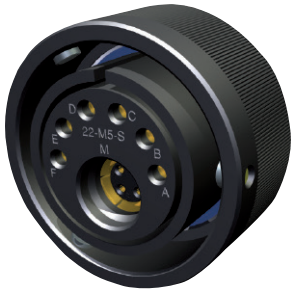

ABMPSEO6T / ABMP18T

Shell Size	C Max	E Max	ØF Thread Class 2A	ØG	H	Om Min Overlap Mated
18	37.30	24.00	1″ x 20 UNEF	18.30	46.25	15.85
20	40.70	24.00	1 1/8″ x 18 UNEF	20.50	46.25	15.85
22	44.20	24.00	1 1/4″ x 18 UNEF	24.60	46.25	15.85
24	47.70	24.00	1 3/8″ x 18 UNEF	27.00	46.25	15.75
28	54.50	24.00	1 5/8″ x 18 UNEF	32.50	46.25	15.75
32	61.40	27.00	1 7/8″ x 16 UN	35.80	46.25	15.75
36	68.00	27.00	2 1/16″ x 16 UNS	42.50	46.25	15.75
40	74.00	27.00	2 5/16″ x 16 UN	48.50	46.25	15.75

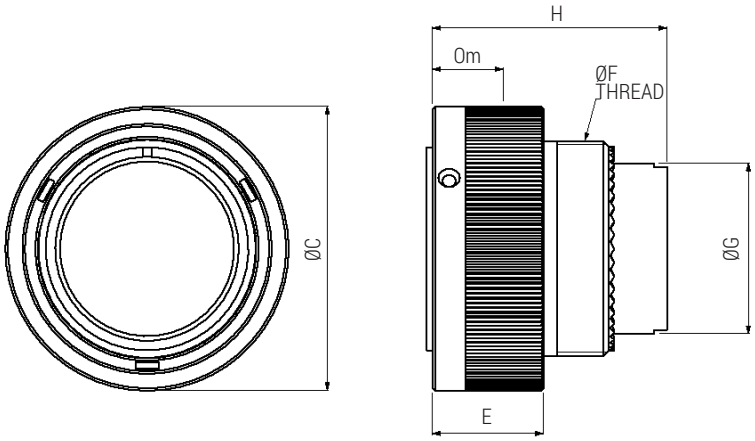

Accesory Options

Locking Backnut for Grommet Sealing Only - LBN

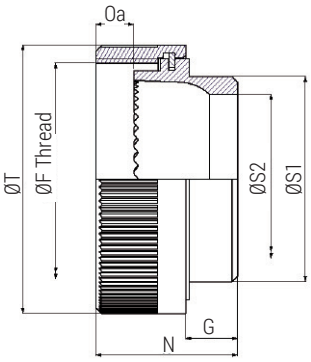

ABBP ## LBN
Series prefix
Shell size
Locking back nut

Shell Size	ØF Thread Class 2B	G Max	N Max	ØS1 Max	ØS2 Min	ØT Max	Oa Min Overlap Accessory
18	1" x 20 UNEF	8.70	25.65	25.50	16.70	31.00	7.00
20	1 1/8" x 18 UNEF	8.70	25.65	30.20	19.80	35.00	7.00
22	1 1/4" x 18 UNEF	8.70	25.65	30.20	19.80	38.00	7.00
24	1 3/8" x 18 UNEF	8.70	24.65	36.60	25.40	41.00	7.00
28	1 5/8" x 18 UNEF	8.70	24.65	36.60	27.00	48.00	7.00
32	1 7/8" x 16 UN	8.70	24.65	44.50	32.50	54.00	7.00
36	2 1/16" x 16 UNS	8.70	24.65	50.90	35.70	61.00	7.00
40	2 5/16" x 16 UN	8.70	24.65	57.20	45.00	67.00	7.00

Extended Armoured Cable Adaptor Metric - EACAM

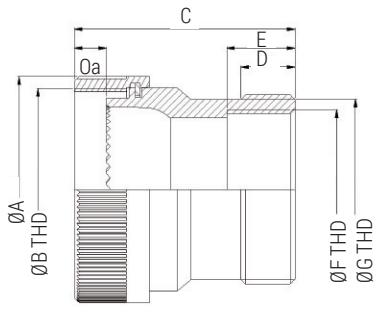

ABBP ## EACAM
Series prefix
Shell size
Extended armoured cable adapter metric

Shell Size	ØA	ØB THD	C	D	E	ØF THD	ØG THD	Oa
18	31	1" x 20 UNEF	53	9.5	14.5	M16 x 1.5	M25 x 1.5	7
20	35	1 1/8" x 18 UNEF	53	9.5	14.5	M16 x 1.5	M25 x 1.5	7
22	38	1 1/4" x 18 UNEF	53	10.5	14.5	M25 x 1.5	M32 x 1.5	7
24	41	1 3/8" x 18 UNEF	53	10.5	14.5	M25 x 1.5	M32 x 1.5	7
28	48	1 5/8" x 18 UNEF	53	11.5	14.5	M32 x 1.5	M40 x 1.5	7
32	54	1 7/8" x 16 UN	53	11.5	14.5	M32 x 1.5	M40 x 1.5	7
36	61	2 1/16" x 16 UNS	53	12.5	14.5	M40 x 1.5	M50 x 1.5	7
40	67	2 5/16" x 16 UN	53	12.5	14.5	M40 x 1.5	M50 x 1.5	7

ABMP Series

Accessory Options Metal Protective Caps

Shell Size	B MAX	ØC Max	ØD Max	E1 Max	E2 Max	F1 Max	F2 Max	L (approx)	Ød1 Min	Ød2 +0.5, -0 +0.02, -0	Oa Min Overlap Mated
18	36.50	38.70	30.80	24.00	27.30	29.80	33.90	100	4.85	4.30	15.85
20	39.90	42.10	34.20	24.00	27.30	29.80	33.90	130	4.85	4.30	15.85
22	43.10	45.30	37.40	24.00	27.30	29.80	33.90	130	4.85	4.30	15.75
24	46.60	48.80	40.90	24.00	27.30	29.80	33.90	130	4.85	4.30	15.75
28	53.40	54.60	46.70	24.00	27.30	29.80	33.90	160	4.85	4.30	15.75
32	60.10	61.30	53.40	27.00	27.30	29.80	33.90	160	4.85	5.50	15.75
36	66.30	67.50	59.60	27.00	27.30	29.80	33.90	160	4.85	5.50	15.75
40	72.10	73.40	65.50	27.00	27.30	29.80	33.90	160	4.85	5.50	15.75

ABBE**XPCA M32
(with nylon cord)

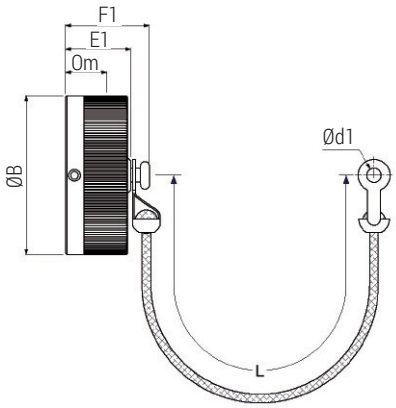

ABBE**XPCAK M32
(with sash chain)

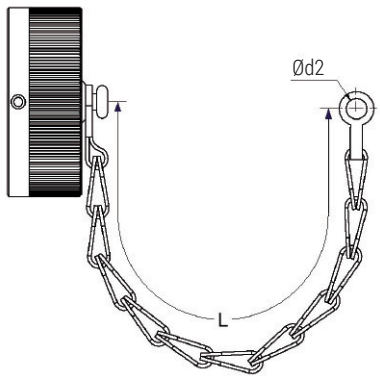

ABBE**EPCA M32
(with nylon cord)

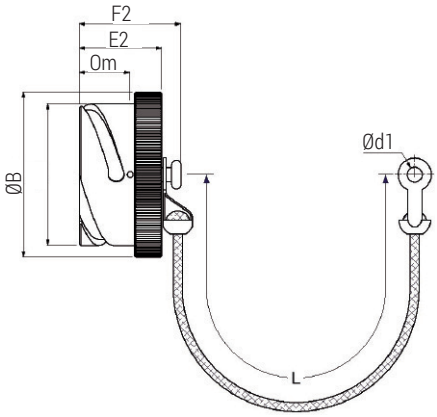

ABBE**EPCAK M32
(with sash chain)

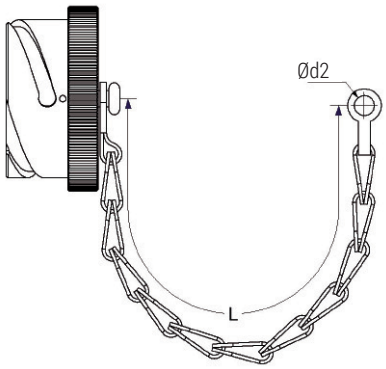

Accessory Options Connector Fixing Nut Plates

ABMP Series

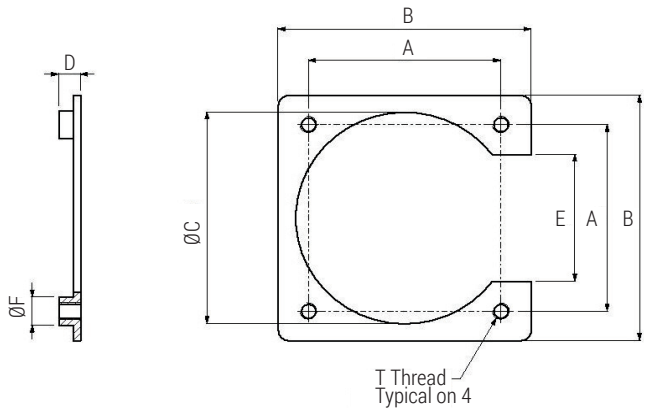

Shell Size	A	B Max	ØC Max	D	E Max	ØF Max
18	26.97	34.62	30.48	2.69/4.22	20.21	6.00
20	29.36	38.48	33.53	2.69/4.22	22.47	6.00
22	31.75	40.84	36.65	2.69/4.22	23.54	6.00
24	34.93	44.83	40.00	2.69/4.22	25.90	7.50
28	39.67	51.18	46.61	2.69/4.22	29.08	7.50
32	44.45	59.10	52.75	3.50/5.00	30.68	8.00
36	49.23	63.86	59.10	3.50/5.00	35.43	8.00
40	55.58	74.68	68.33	3.50/5.00	38.60	8.00

ABB **NP METRIC

Part Number ABB **NP	T Thread (Metric)
18	M3 X 0.5
20	M3 X 0.5
22	M3 X 0.5
24	M3 X 0.5
28	M3 X 0.5
32	M4 X 0.7
36	M4 X 0.7
40	M4 X 0.7

ABB **NPA IMPERIAL

Part Number ABB**NPA	T Thread (Metric)
18	4-40 UNC
20	4-40 UNC
22	4-40 UNC
24	4-40 UNC
28	4-40 UNC
32	8-32 UNC
36	8-32 UNC
40	8-32 UNC

Panel Gasket, Non-conductive / Conductive

Front & rear mounted connectors - RPG/S & FPG/S

GASKET FOR FRONT MOUNTED CONNECTORS	
Part Number	Description
SB**RPG	Gasket (Non-conductive)
SB**RPGS	Conductive Gasket

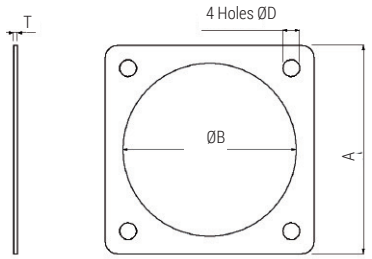

GASKET FOR REAR MOUNTED CONNECTORS	
Part Number	Description
SB**FPG	Gasket (Non-conductive)
SB**FPGS	Conductive Gasket

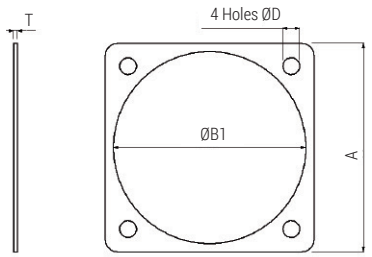

Shell Size	A	ØB Nominal	ØB1 Nominal	ØD Min	T Nominal
18	34.90	25.40	30.90	3.43	1.00
20	38.10	28.60	34.30	3.43	1.00
22	41.30	31.70	37.50	3.43	1.00
24	44.50	34.90	41.00	4.12	1.00
28	50.80	41.30	46.80	4.12	1.00
32	57.20	47.60	53.50	4.78	1.00
36	63.50	52.60	59.70	4.78	1.00
40	69.90	61.90	65.50	5.10	1.00

Notes:

Conductive gaskets have a conductivity of 5m Ohms, temp range of -50 to +200˚C

ABMP SERIES

HIGH SPEED & SIGNAL DATA CONNECOTR

For our full product portfolio, in-house and local design support / distribution partners, visit:

www.ttelectronics.com/connectors

Abercynon, Mountain Ash, Rhondda Cynon Taff, Wales
Let's Talk: +44 1443 740 331
connectors@ttelectronics.com

WWW.TTELECTRONICS.COM

© TT Electronics 2020. All Rights Reserved.