High Temperature Thick Film Chip Resistors

HTC Series

Features

- Operation to 200°C
- Excellent high temperature stability
- Improved working voltage ratings
- Pb-free wrap-around terminations
- Standard chip sizes available from 1206 to 2512

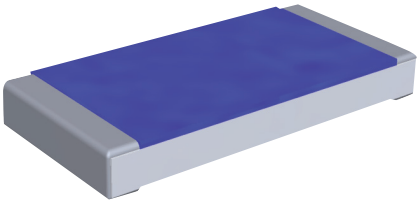

All parts are Pb-free and comply with EU Directive 2011/65/EU amended by (EU) 2015/863 (RoHS3)

Electrical Data

Characteristic	1206	2010	2512
Resistance Range	1Ω to 10MΩ; ±1%, ±5% 10Ω to 1MΩ; ±0.5%, ±5%, ±1%		
150°C Power Rating	200mW	500mW	750mW
Max Voltage Rating	200V	400V	500V
Absolute TCR	± 100ppm/°C		
Operating Temperature	-55°C to +200°C		
Pad/Trace Area[1]	80mm²	200mm²	300mm²
Termination	Wrap-around Pb-free with leach resistant Ni barrier		

Note[1] : Recommended minimum pad and adjacent trace area for each termination for rated power on FR4 PCB.

Environmental Data

Test	Method	Specification	
		Maximum[2]	Typical
Load Life	MIL-STD-202 Method 108 (Rated Power for 1000hrs @ 150°C)	1.00%	0.25%
High Temperature Exposure	1000 hours @ 200°C	1.00%	0.20%
Short Time Overload	MIL-PRF-55342H (6.25X rated power for 5secs)	1.00%	0.10%
Moisture Resistance	MIL-STD-202 Method 106G	1.00%	0.25%
Thermal Shock	MIL-STD-202 Method 107G Condition B	0.25%	0.05%
Resistance to Soldering Heat	MIL-STD-202 Method 210F	0.25%	0.05%
Solderability	MIL-STD-202 Method 208 (245°C, 5 seconds)	>95% Coverage	

Note[2] : 0.01Ω added for all resistance values <10Ω.

General Note

TT Electronics reserves the right to make changes in product specification without notice or liability.

All information is subject to TT Electronics' own data and is considered accurate at time of going to print.

BI Technologies IRC Welwyn

www.ttelectronics.com/resistors

High Temperature Thick Film Chip Resistors

HTC Series

Physical Data

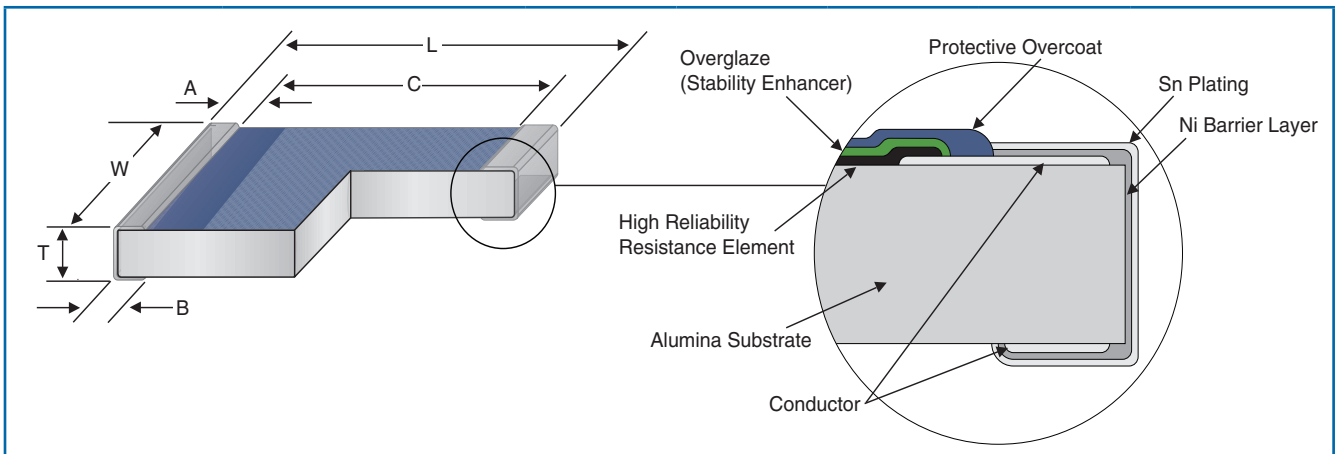

Part Type	L (mm)	W (mm)	T max (mm)	A (mm)	B min (mm)	C (mm)	Weight (grams)
1206	3.2±0.4	1.6±0.2	0.7	0.4±0.15	0.4±0.2	1.7	0.020
2010	5.1±0.3	2.5±0.2	0.8	0.6±0.25	0.6±0.3	3.0	0.036
2512	6.5±0.3	3.2±0.2	0.8	0.6±0.25	0.6±0.3	4.4	0.055

Construction:
Thick film resistor material, overglaze and organic protection are screen printed on a 96% alumina substrate. Wrap-around terminations have an electroplated Ni barrier and pure Sn matte finish, ensuring excellent `leach´ resistance properties and solderability.

Marking:
Components are not marked. Reels are marked with type, value, tolerance, date code and quantity.

Solvent resistance:
The body protection is resistant to all normal industrial cleaning solvents suitable for printed circuits.

Power Derating Data

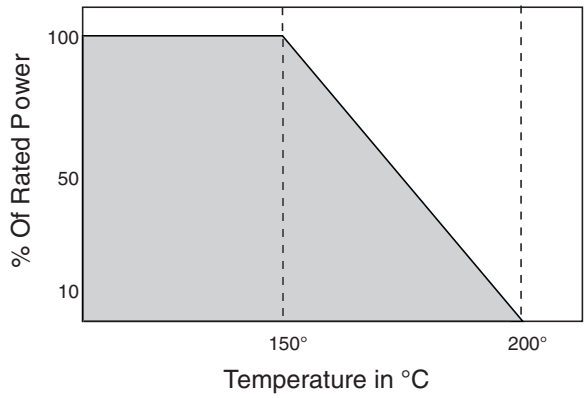

Ordering Data

Prefix TKC - HTC - 2512LF - 100R - F

Chip Type
HTC (High Temperature Chip)

Chip Size and Termination
1206LF = 100% Tin (pb-free) termination
2010LF = 100% Tin (pb-free) termination
2512LF = 100% Tin (pb-free) termination

Resistance Value (4 Digit Code)
Ex. 1R00 = 1Ω; 100R = 100Ω; 10K0 =10KΩ; 1M50 = 1.5MΩ

Tolerance Code
J = ±5%; F = ±1%; D = ±0.5%

For additional information or to discuss your specific requirements, please contact our Applications Team using the contact details below.